Current KSC Development Activities

SCWG #20

Albuquerque, NM

3 June 1997

Velda G. Musgrove
McDonnell Douglas-KSC

Topics of Discussion

- Control and Monitor Unit (CMU)
- Advanced Life Science Plant Growth Model

CMU - Current Uses

- Space Station MPLM Processing
  - Space Station Processing Facility (SSPF) High-Bay
  - SSPF Intermediate Bay
  - Shuttle Landing Facility (SLF)
- Spacelab RAU Bus Analyzer
- Controlled Ecological Life Support System

Space Station MPLM Pre-Launch Processing in SSPF

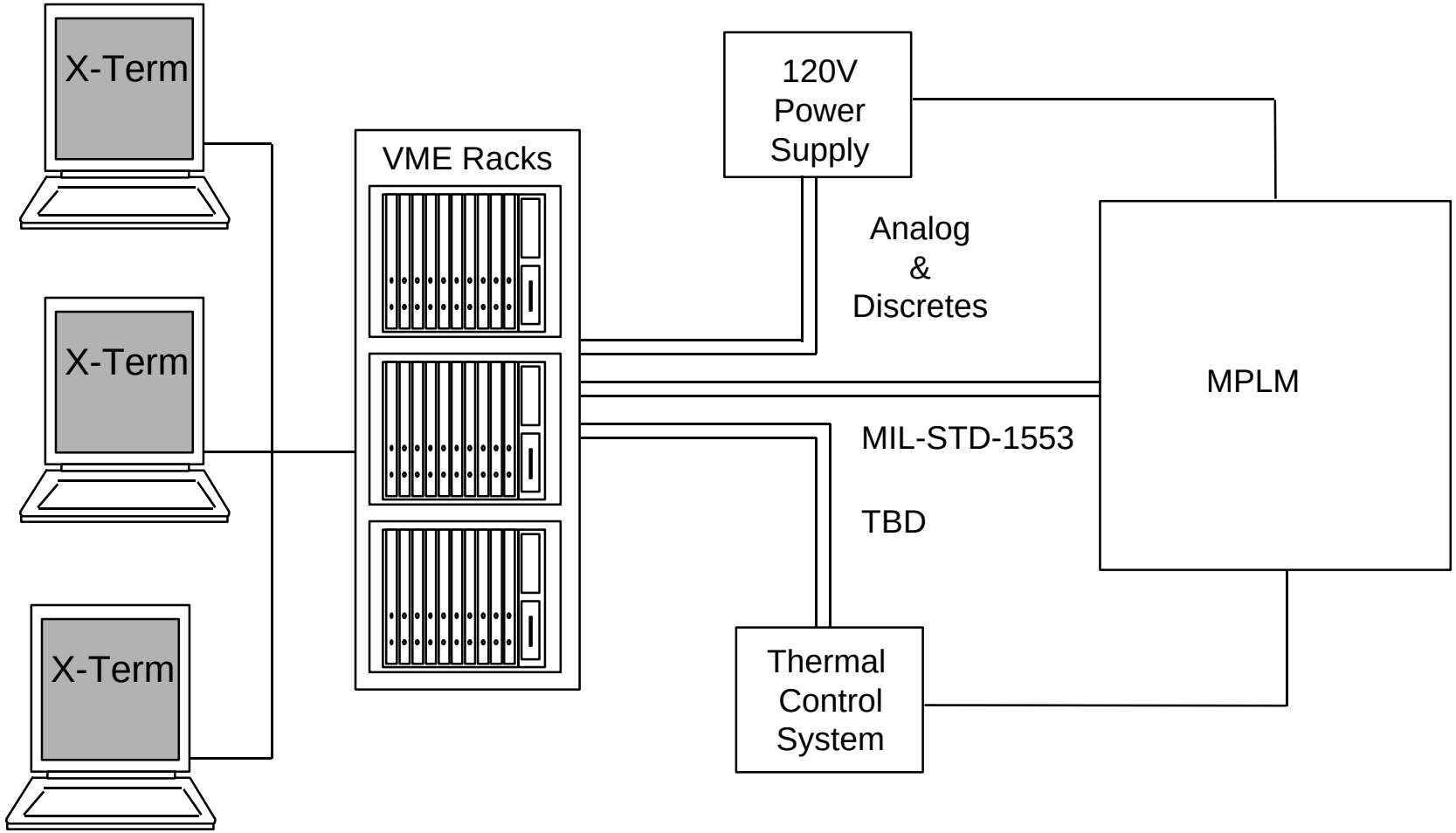

MPLM Post Landing at SLF

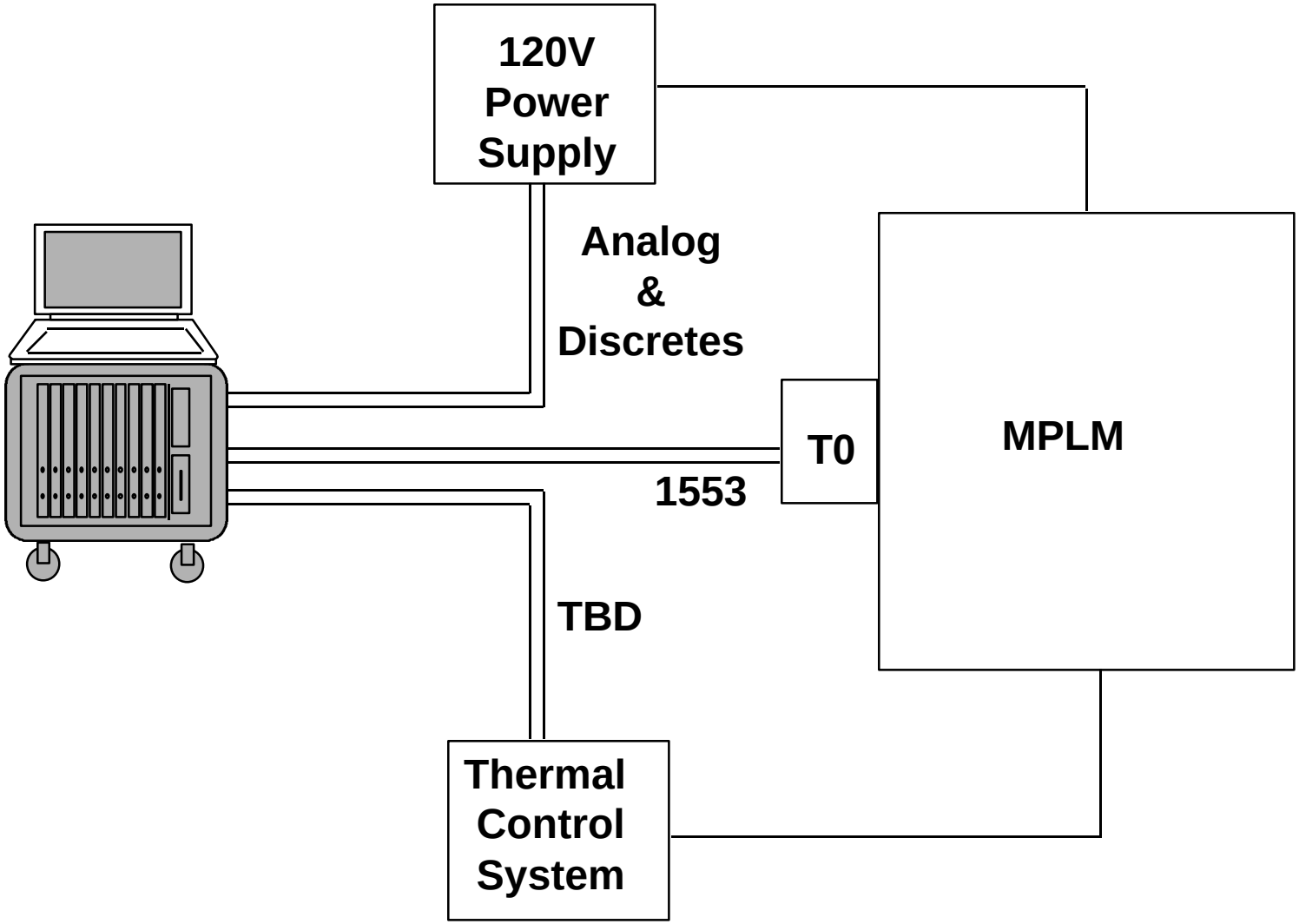

Spacelab - RAU Bus Analyzer

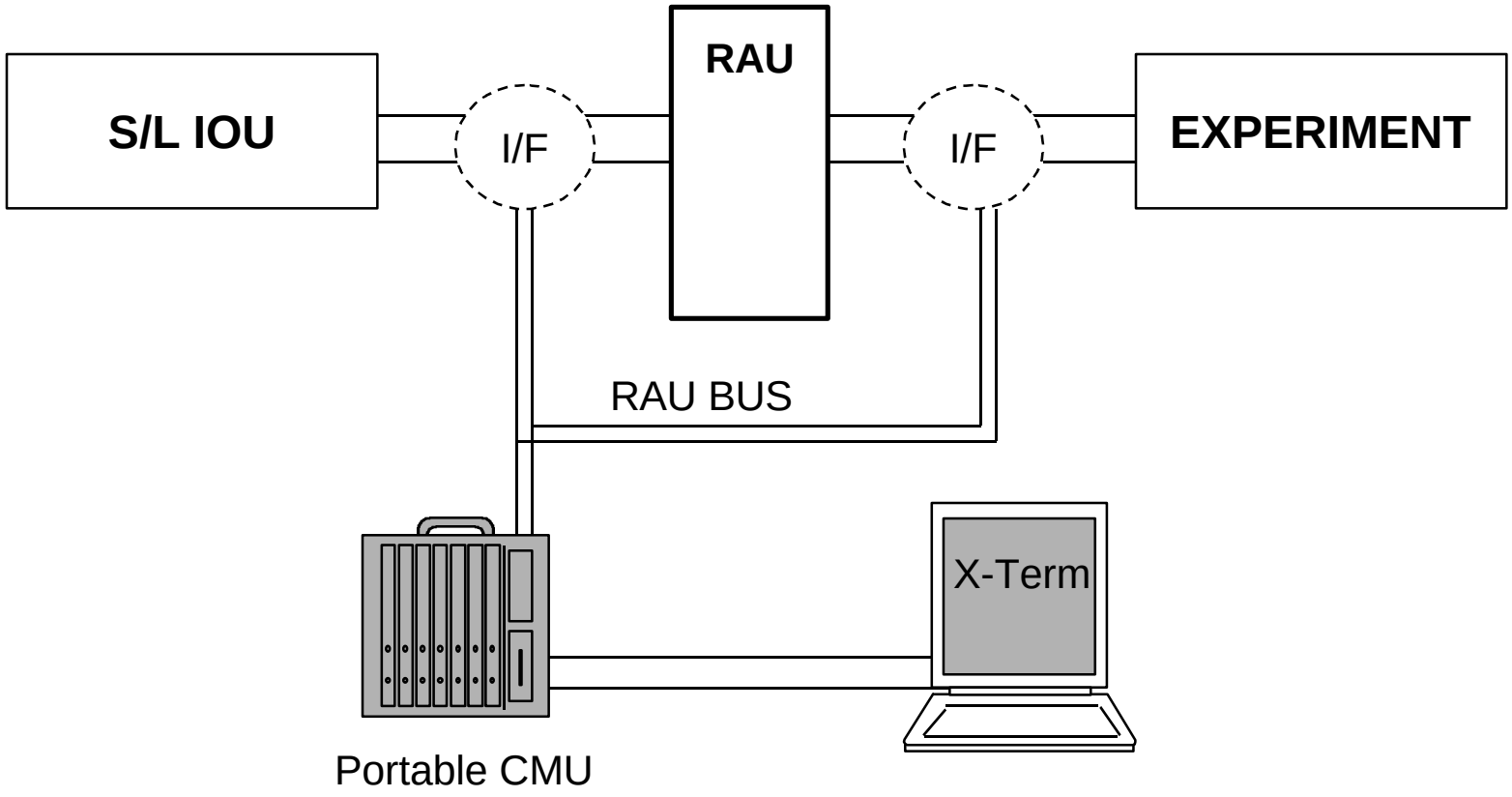

Controlled Ecological Life Support System

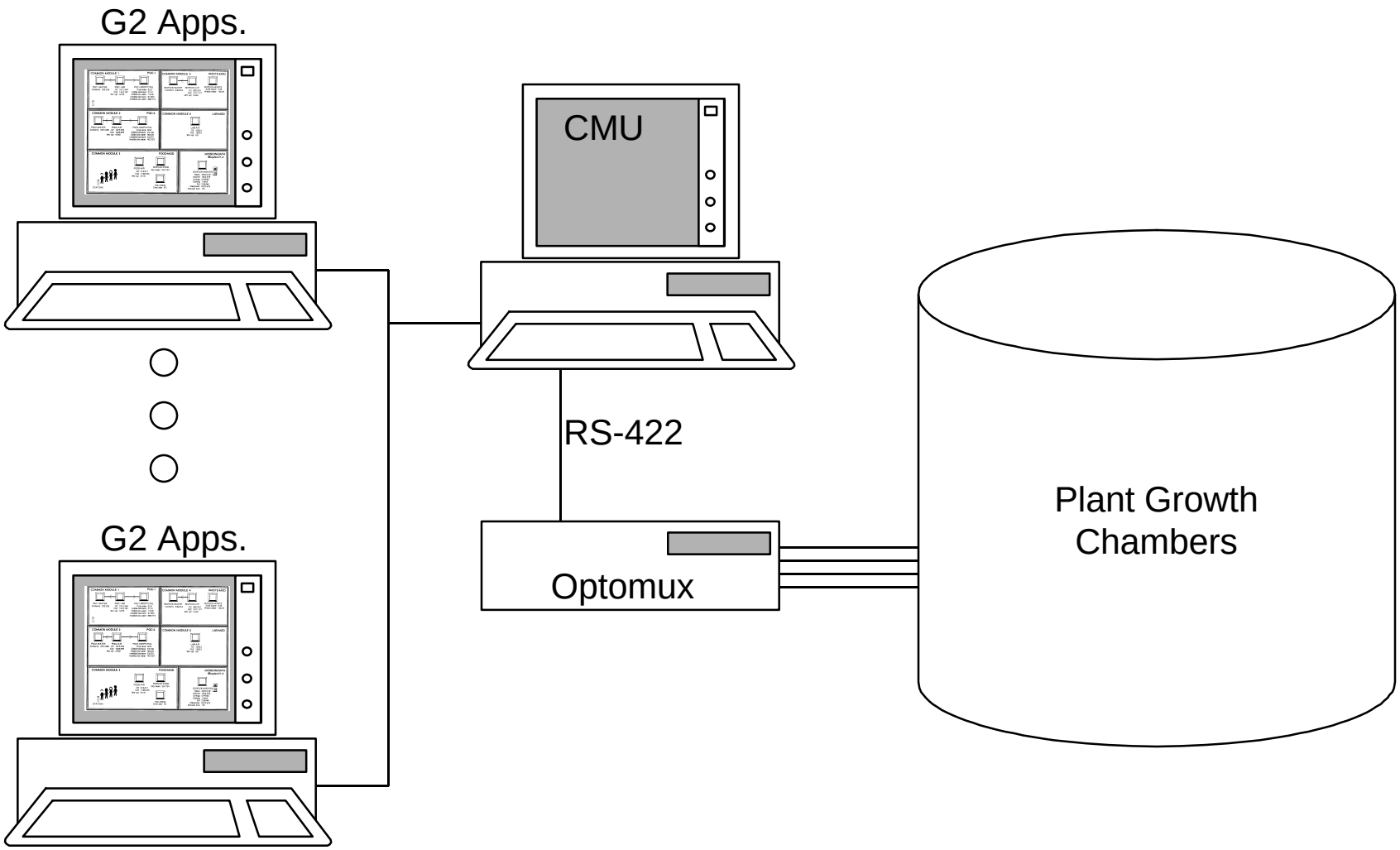

Commercial Software

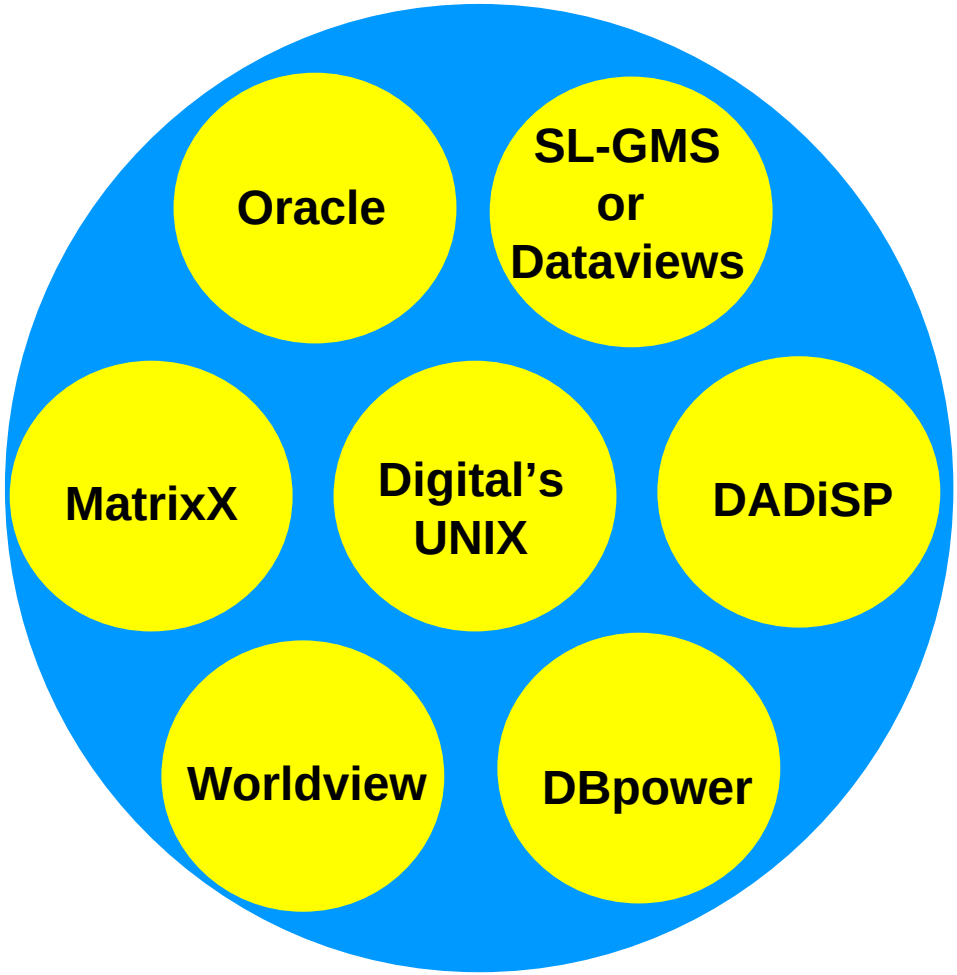

Software Architecture

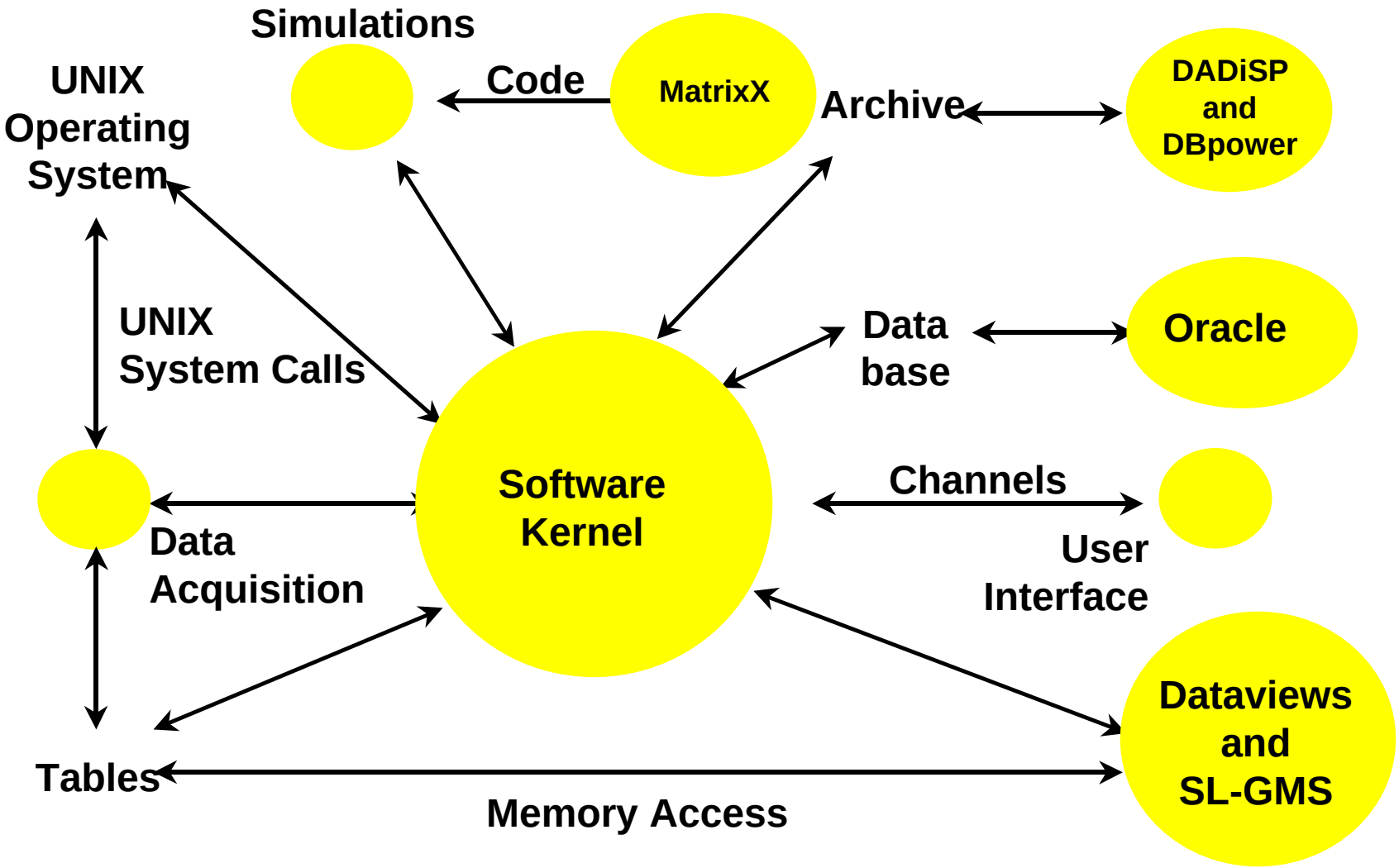

Current Capabilities

- Startup
- Shutdown
- Status Monitor
- Oracle Meas/Command Data Manager
- Real Time Table Manager
- On-line Documentation
- Analog I/O
- Discrete I/O
- RS-422
- System Notice
- ASCII Meas/ Command Data Manager
- ASCII System Configuration
- Data Processor
- Demand Data Distribution
- Channels
- Archival/Retrieval
- User Defined Alphanumeric Retrieval
- System Control GUI
- Data Monitor GUI
- Command Processor GUI
- System Commanding GUI
- Archival/Retrieval GUI
- 1553 BC/RT/BM
- SL-GMS Dynamic Displays
- Graphical Data Analysis
- User Defined Graphical Retrievals

Planned Capabilities

- Measurement Logic
- Derived Measurements
- Command Scripts
- ISS Data Import
- Playback
- Data Analysis
- Analog I/O
- Discrete I/O
- Serial I/O
- IEEE-488
- PCMCIA 1553B
- System Message GUI
- System Monitor GUI
- Data Simulator

Advanced Life Science (ALS) Bioplex Model

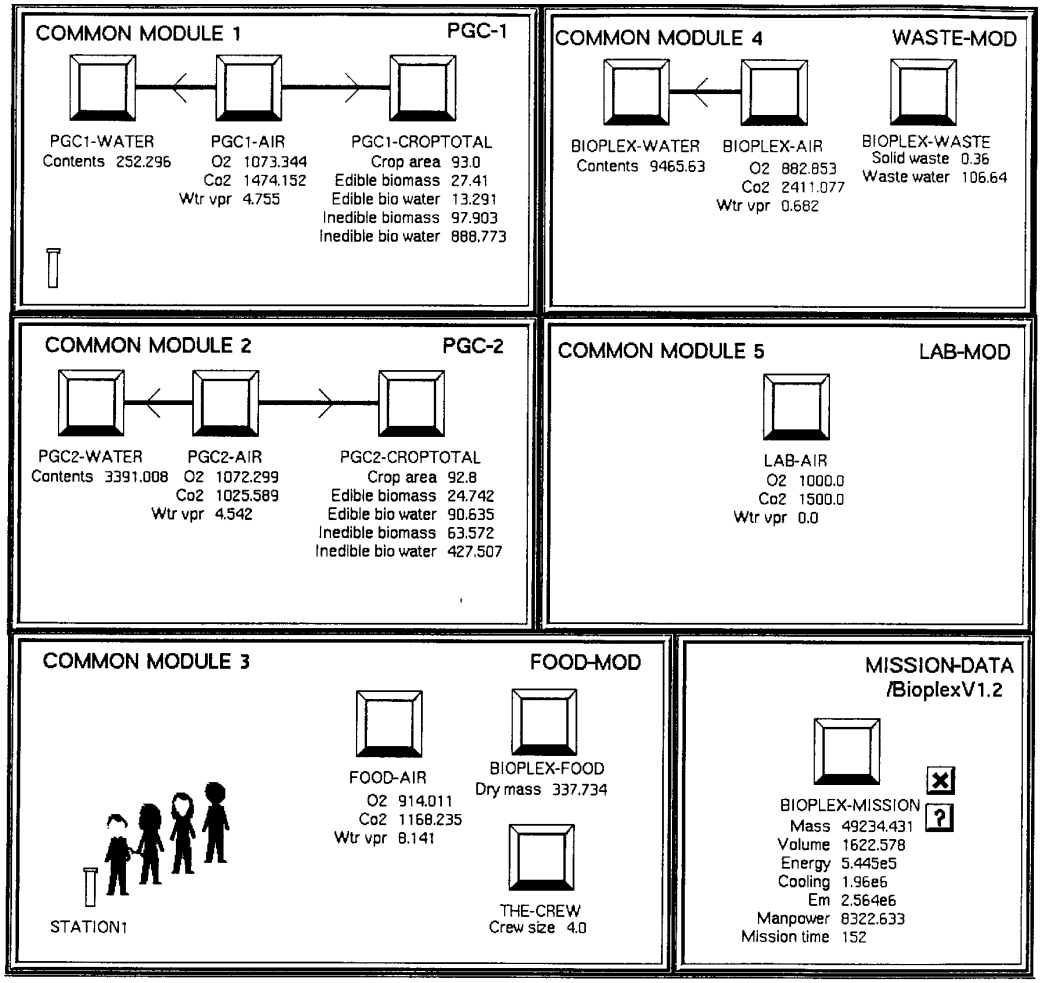

- 2 Plant Growth Chambers
- 3 Lab/Hab Modules
- Simulates ability of crops to sustain human life.
  - Food & oxygen production
  - Elimination of excess CO2

Simulates Individual Crop Growth Cycles

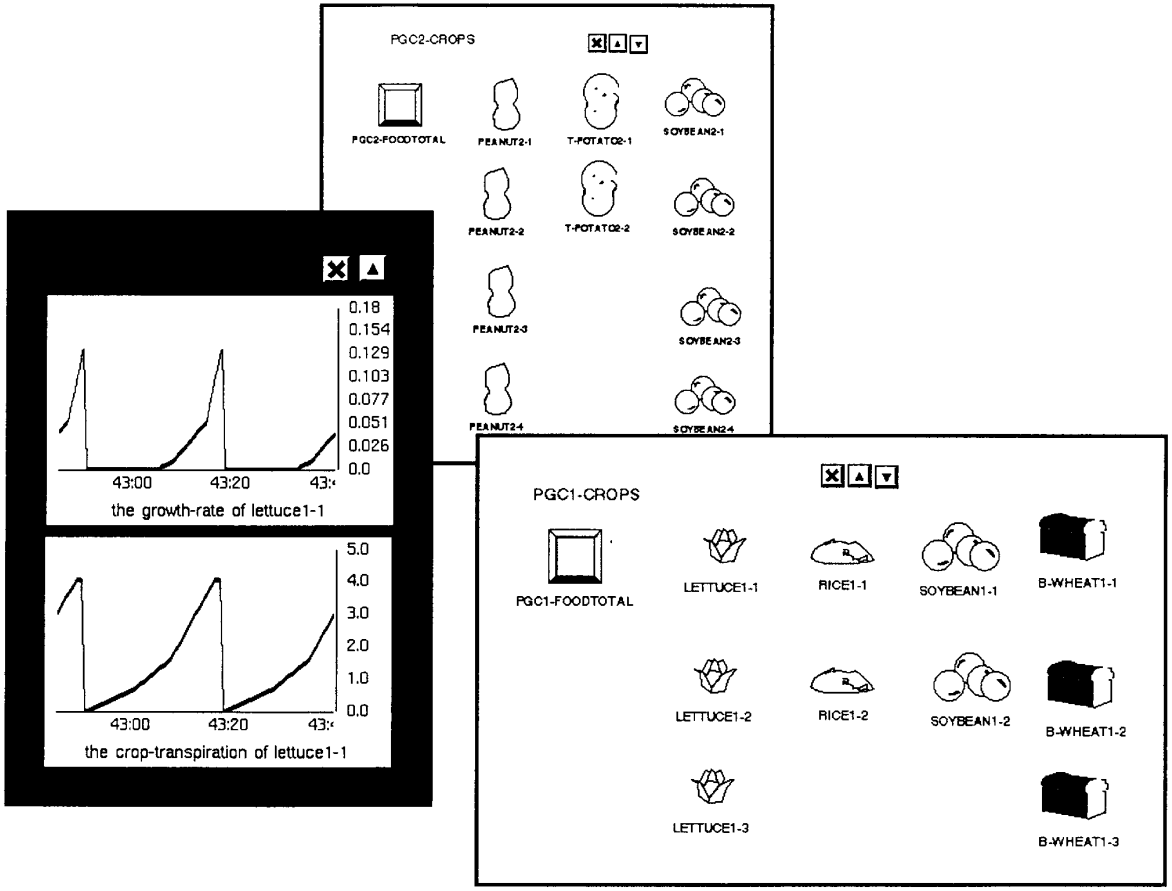

Provides Charts and Tables of Critical System Attributes

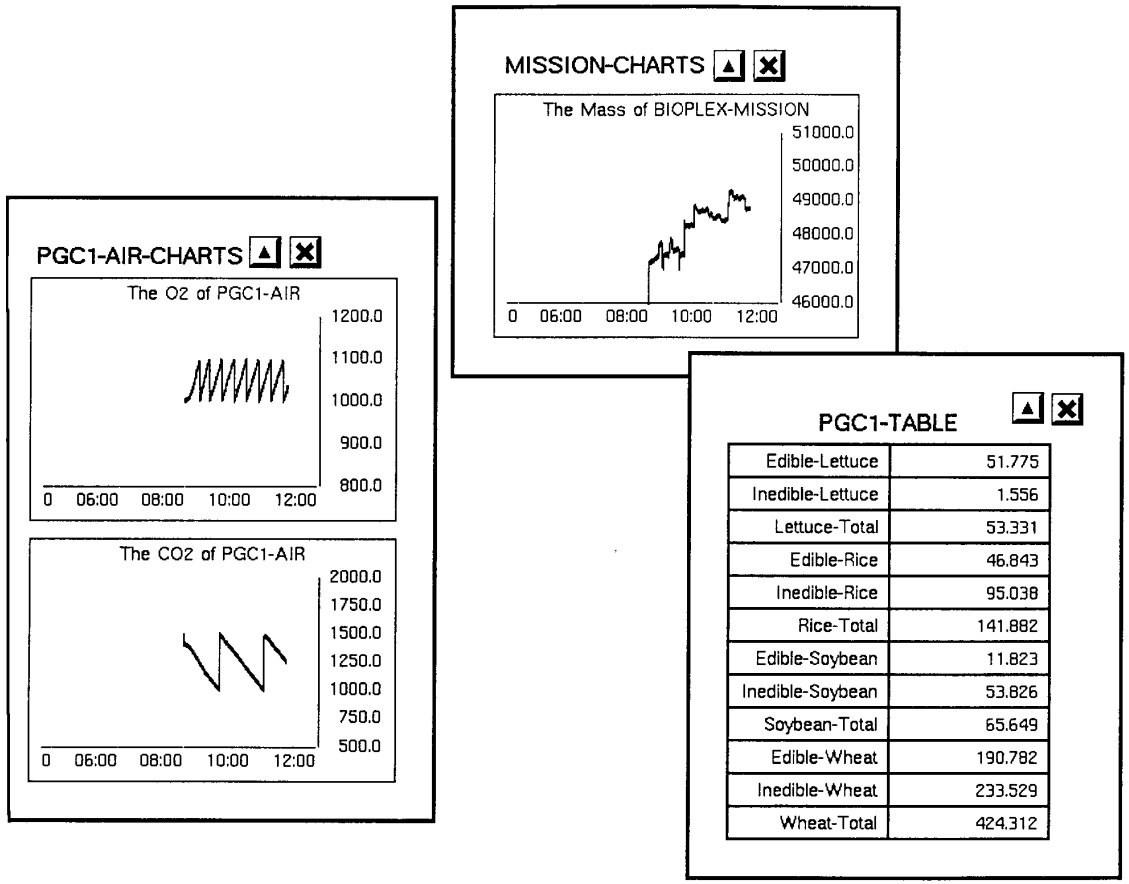

Edible-Lettuce	51.775
Inedible-Lettuce	1.556
Lettuce-Total	53.331
Edible-Rice	46.843
Inedible-Rice	95.038
Rice-Total	141.882
Edible-Soybean	11.823
Inedible-Soybean	53.826
Soybean-Total	65.649
Edible-Wheat	190.782
Inedible-Wheat	233.529
Wheat-Total	424.312